S:\AFMMachines\Standard Parts\AMP\206708-1\

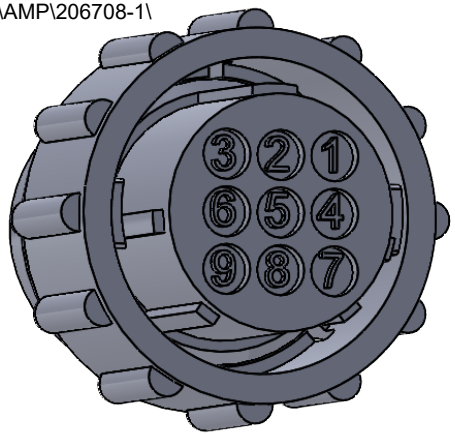

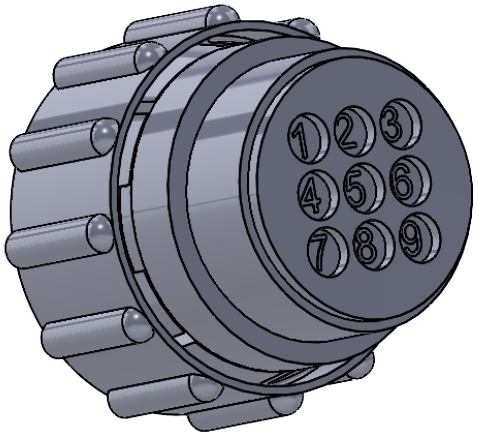

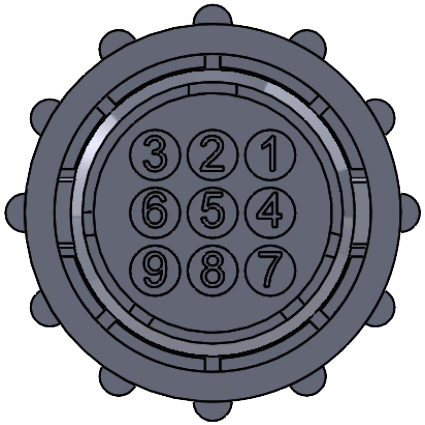

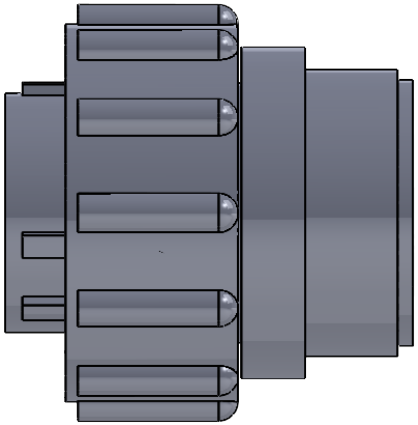

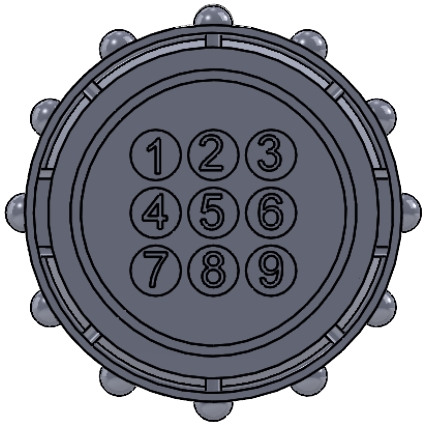

PROPRIETARY AND CONFIDENTIAL

THE INFORMATION CONTAINED IN THIS DRAWING IS THE SOLE PROPERTY OF AFM ENGINEERING, INC. ANY REPRODUCTION IN PART OR AS A WHOLE WITHOUT THE WRITTEN PERMISSION OF AFM ENGINEERING INC. IS PROHIBITED.

NEXT ASSY	USED ON
APPLICATION	

DIMENSIONS ARE IN INCHES
TOLERANCES:
FRACTIONAL ±.032
ANGULAR: MACH ± BEND ±
TWO PLACE DECIMAL ±.010
THREE PLACE DECIMAL ±.005

MATERIAL

FINISH

DO NOT SCALE DRAWING

	NAME	DATE
DRAWN		
CHECKED		
ENG APPR.		
MFG APPR.		
Q.A.		

COMMENTS:

AFM Engineering, Inc.

Amphenol

9 Pin Male Plug
AFM Part #100121

SIZE	DWG. NO.	REV.
A	206708-1	

SCALE:2:1 | WEIGHT: | SHEET 1 OF 1