S:\AFMMACHINES\15000 FOIL FEED SYSTEMS\

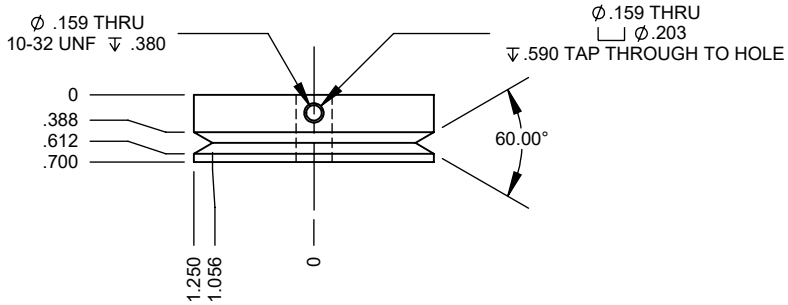

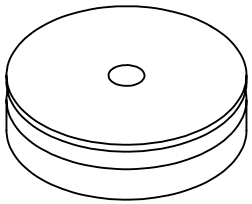

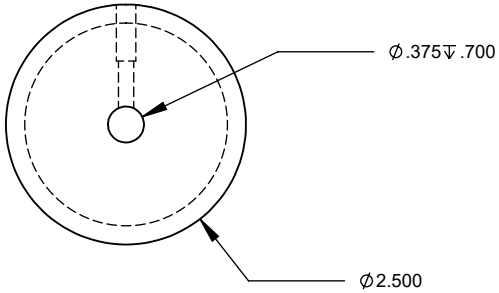

PROPRIETARY AND CONFIDENTIAL

THE INFORMATION CONTAINED IN THIS DRAWING IS THE SOLE PROPERTY OF AFM ENGINEERING, INC. ANY REPRODUCTION IN PART OR AS A WHOLE WITHOUT THE WRITTEN PERMISSION OF AFM ENGINEERING INC. IS PROHIBITED.

NEXT ASSY	USED ON
APPLICATION	

DIMENSIONS ARE IN INCHES
TOLERANCES:
FRACTIONAL ±.032
ANGULAR: MACH ± BEND ±
TWO PLACE DECIMAL ±.010
THREE PLACE DECIMAL ±.005

MATERIAL: AL 6061

FINISH: ANODIZE BLACK

DO NOT SCALE DRAWING

	NAME	DATE
DRAWN		
CHECKED		
ENG APPR.		
MFG APPR.		
Q.A.		

COMMENTS:

AFM Engineering, Inc.

AFM Engineering, Inc.
Foil Feed Systems
Foil Feed Large Pulley
AFM Part #100249

SIZE	DWG. NO.	REV.
A	15000-002	
SCALE:1:2	WEIGHT:	SHEET 1 OF 1